HAYWARD®

Salt & Swim™ 3C Installation Quick Start

Before you begin

Pre-Installation Checklist

- ☐ Pool is less than 30,000 gallons
- ☐ You have acquired an SAS-CELL salt cell (sold separately)
- ☐ There is at least 10 inches of straight pipe in the return piping after all installed equipment (and the pipe is at least 2 inches off of the ground) to install the Cell Vessel
- ☐ The Control Box will be mounted within 3 feet of a 120V GFCI outlet
- ☐ The Control Box will be mounted within 15 feet of the installed Cell Vessel
- ☐ The Control Box will be installed at least 10 feet away from the pool.
- ☐ Pool plumbing is 1½" or 2" PVC (If black polyethylene pipe is used, see manual)
- ☐ You have a saw suitable for cutting PVC
- ☐ You have tools for mounting the Control Box (drill, drill bits, screwdriver)
- ☐ You have a permanent marker to mark the PVC pipe
- ☐ You have balanced your pool chemistry and have 3200ppm salt in your pool (see Chemistry Quick Start Guide)

Installation Preparation

- ☐ Read this entire Quick Start Guide
- ☐ Remove power to filter pump
- ☐ Drain water from pool piping
- ☐ Verify that all parts are included in the box
- ☐ You are wearing safety glasses and have read the safety precautions in the owner's manual

Spread out parts on ground

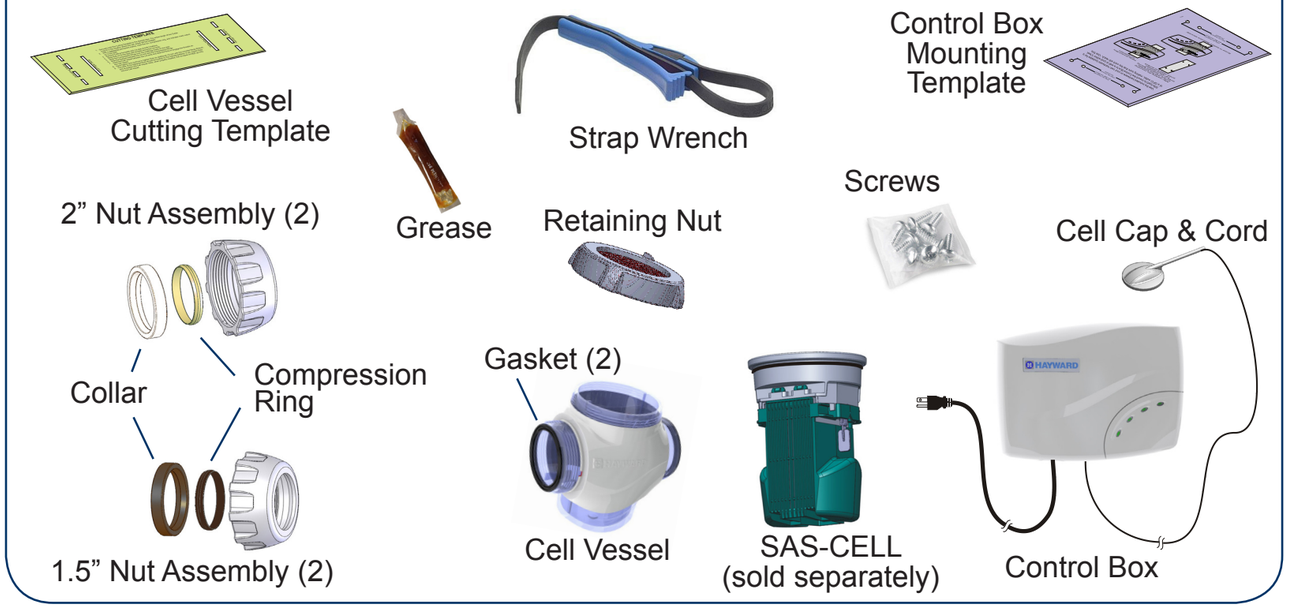

Overview

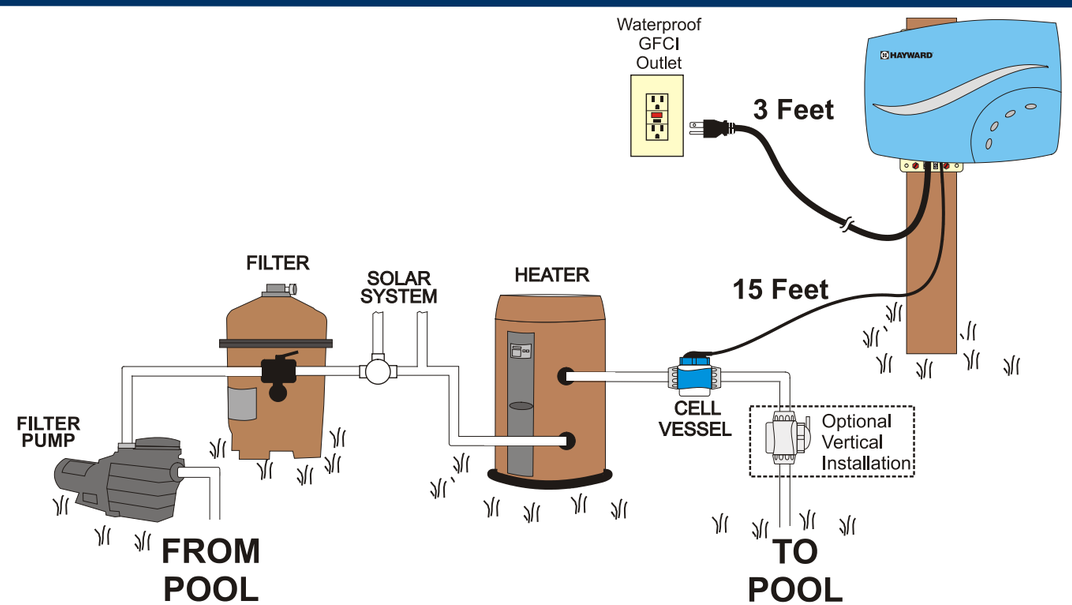

STEP 1: Mount Control Box

Mount the Control Box to a wall or post within 3 feet of a GFCI outlet, making sure that the cord will reach. The Control Box will also have to be mounted within 15 feet of the Cell Vessel as shown in the Overview.

Use the included Mounting Template to help locate the mounting holes and fasten the Control Box to the intended surface.

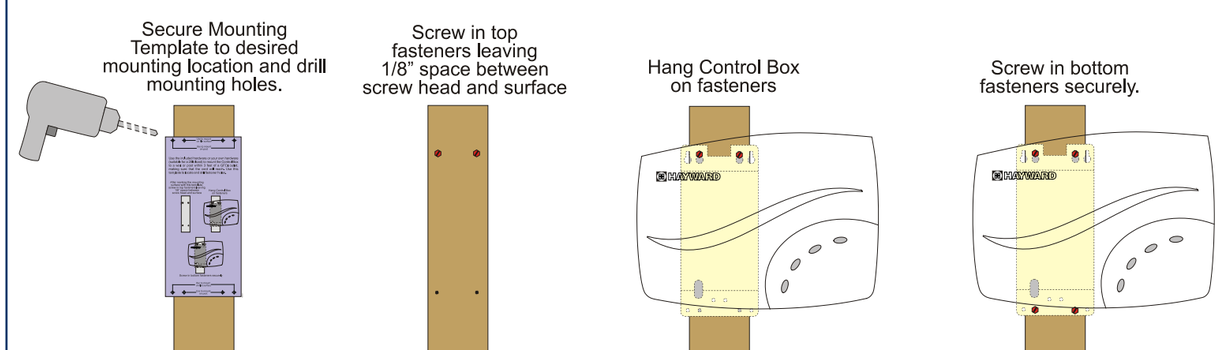

Salt & Swim™ 3C Installation Quick Start

STEP 2: Determine where Cell Vessel will be installed

The Cell Vessel must be the very last component installed in the pool's return piping before the water returns back to the pool. It can be installed vertically or horizontally and requires approximately 10 inches of straight pipe at the installation location.

Use the included Cutting Template to aid in marking and cutting the pipe. The entire Cutting Template must fit on the pipe otherwise the Cell Vessel will not fit. Secure the Template and use a permanent marker to mark all 10 cutouts.

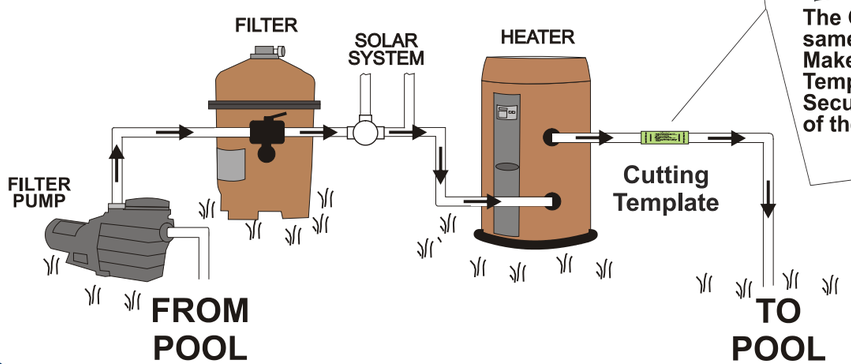

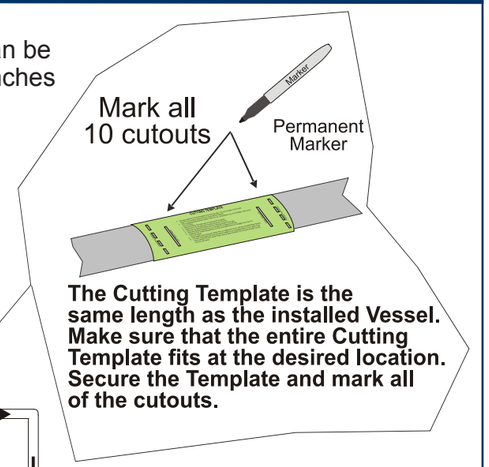

STEP 3: Install Nut Assembly

Follow the procedure below to install the Nut Assembly.

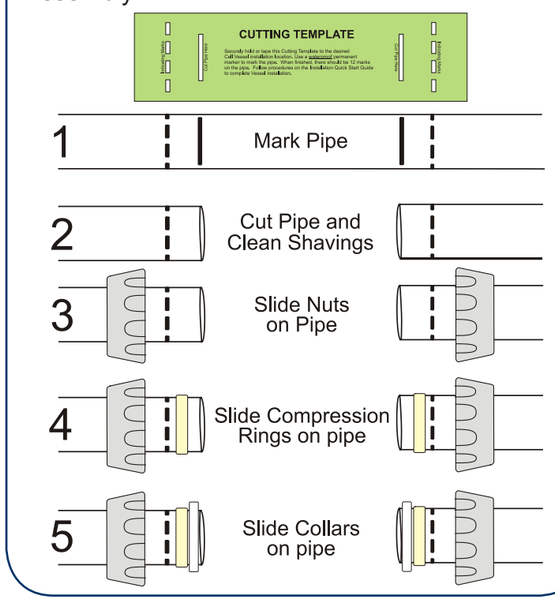

STEP 4: Install Cell Vessel

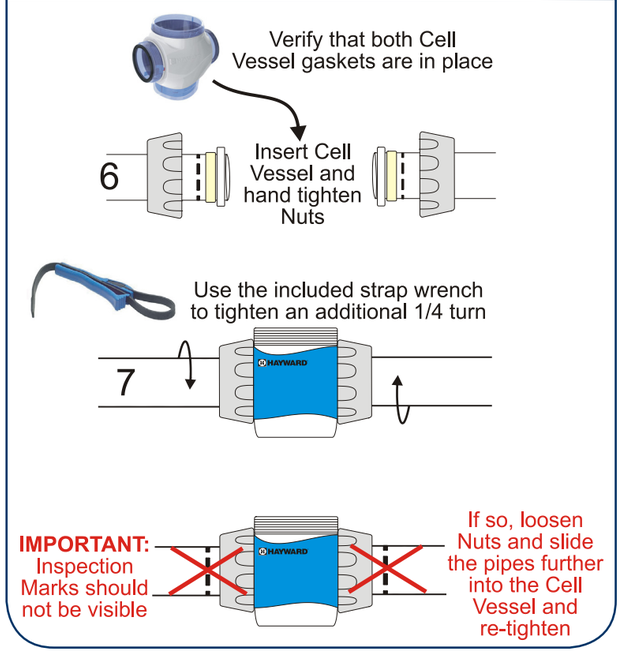

STEP 5: Insert Cell

Remove the foam protector from the SAS-CELL. Fully cover Cell pins with supplied grease. Verify that the O-ring is attached to the Cell before inserting the Cell into the Cell Vessel as shown.

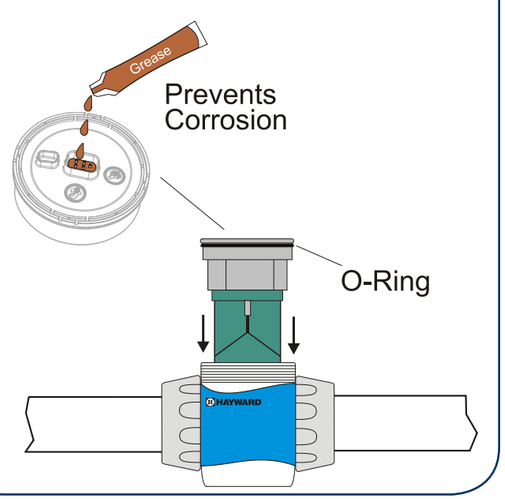

STEP 6: Attach Cap

Plug in Cell Cap and secure with Retaining Nut.

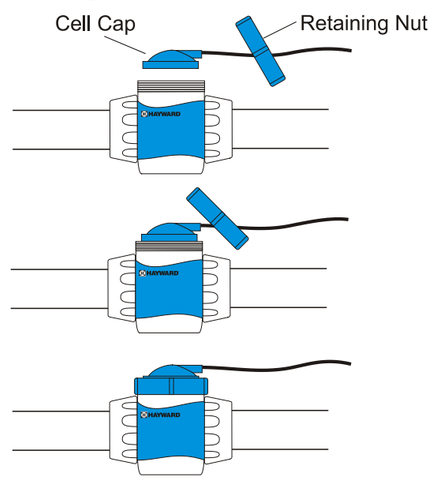

Run the pump for 5 minutes or until all air is out of the system. Check for leaks and then turn the pump off.

STEP 7: Plug in Linecord

With the pump off and water chemistry adjusted (see Water Chemistry Quick Start Guide), plug linecord into a 120 VAC ground fault circuit interrupter (GFCI) safety outlet or an outlet protected by a ground fault circuit breaker (GFCB). If local codes require bonding, see manual.

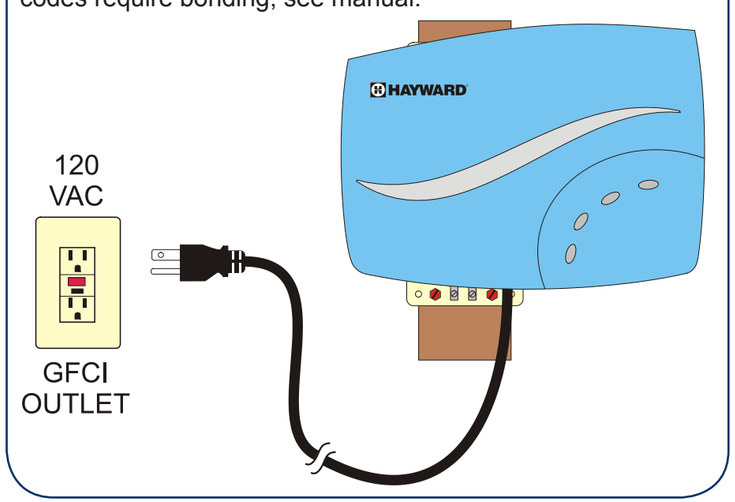

STEP 8: Calibrate Flow Switch

IMPORTANT!

1. After being powered on for the first time, the Salt & Swim will display a *blinking* INADEQUATE WATER FLOW LED and a *solid* STANDING BY LED. Keep the Salt & Swim powered for the remainder of this procedure.
2. Turn the filter pump ON. Make sure that full flow is achieved (no air in the system) and run the pump for at least 15 seconds.
3. Turn the filter pump OFF for 15 seconds.
4. The Salt & Swim should now display a *solid* INADEQUATE WATER FLOW and a *solid* STANDING BY LED. The Flow Switch Calibration procedure is complete. You can now turn on your filter pump and begin normal operation.

092509 RevA